Round 1 - Thursday, November 11, 2021

SHOTLINK

Hewlett Packard Enterprise Houston Open

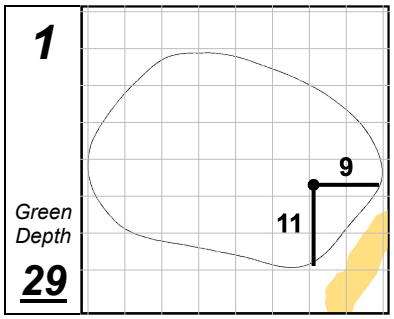

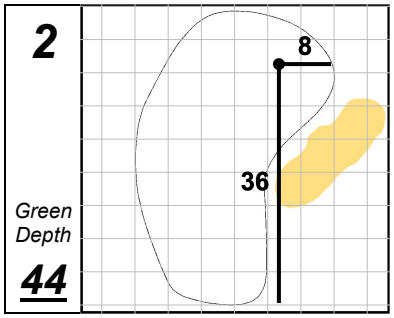

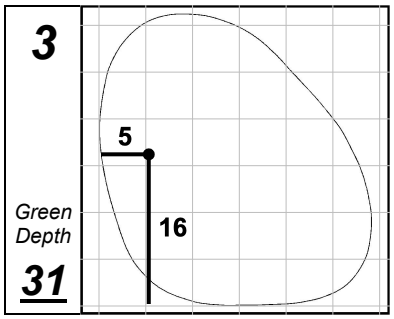

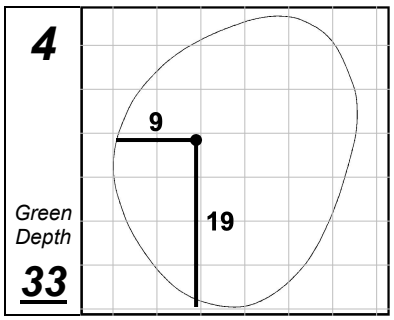

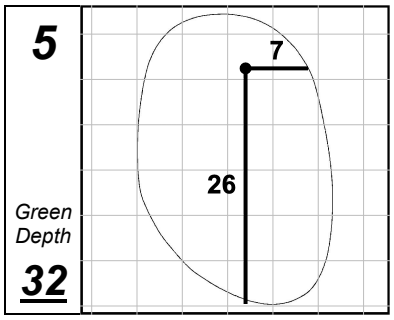

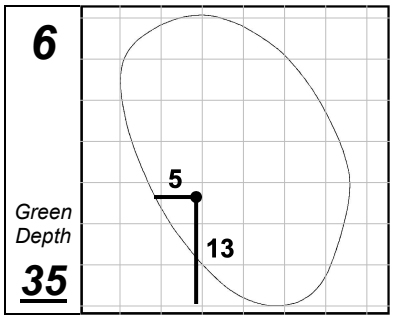

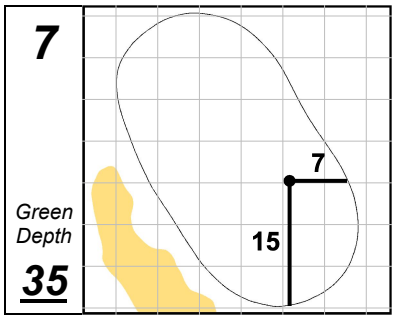

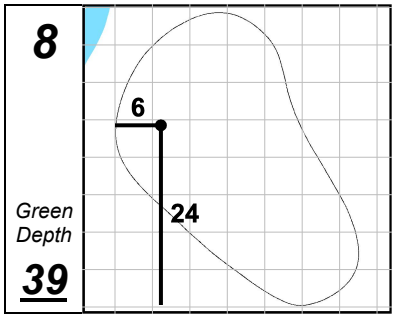

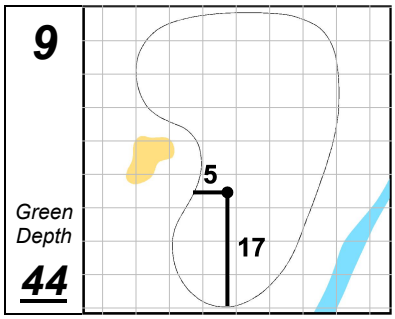

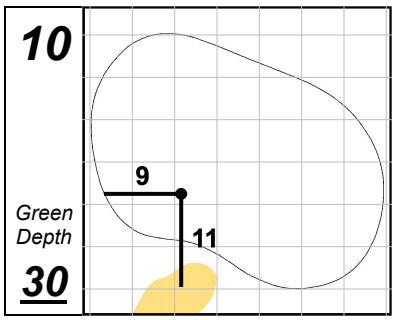

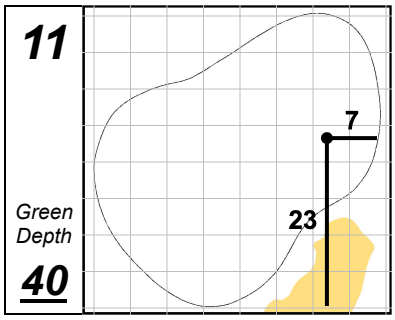

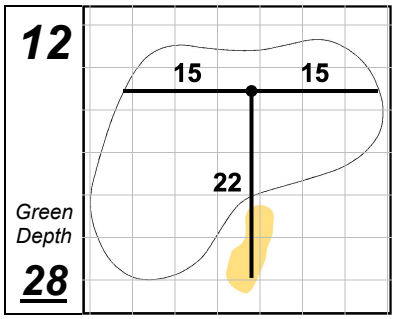

Memorial Park Golf Course

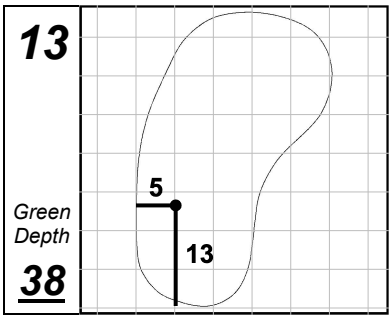

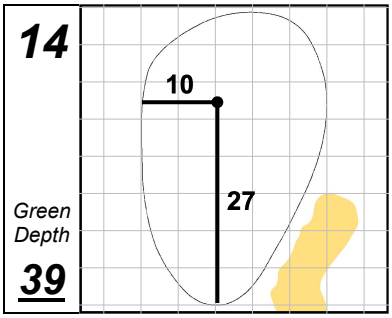

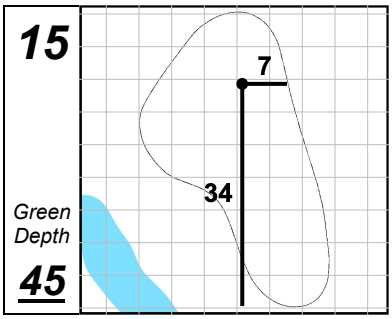

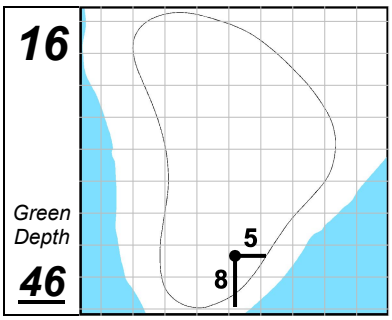

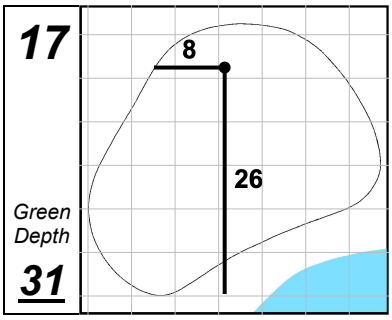

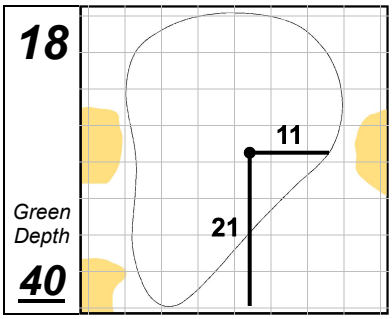

Each side of a complete square on the green represents 5 YARDS.

Wednesday, November 10, 2021 8:15:07 AM